DA*VISION* 4D Tension

Product range	Image size		Aspect ratio, forerun			Fabric size		Bottom bar			Cabinet size		
	Width in cm	Height in cm	Aspect ratio	Forerun in cm	Frame in cm	Width in cm	Height in cm	Length in cm	Height in cm	Width in cm	Length in cm	Height in cm	Depth in cm
	A	B		C		D	E	F	G	H	I	J	K
Standard	**152**	**86**	**16 : 9**	**30**	**5**	**162**	**121**	**167**	**3,4**	**1,8**	**182**	**13,5**	**12,6**
Standard	**170**	**96**	**16 : 9**	**30**	**5**	**180**	**131**	**185**	**3,4**	**1,8**	**200**	**13,5**	**12,6**
Standard	**183**	**103**	**16 : 9**	**30**	**5**	**193**	**138**	**198**	**3,4**	**1,8**	**213**	**13,5**	**12,6**
Standard	**203**	**114**	**16 : 9**	**30**	**5**	**213**	**149**	**218**	**3,4**	**1,8**	**233**	**13,5**	**12,6**
Standard	**213**	**120**	**16 : 9**	**30**	**5**	**223**	**155**	**228**	**3,4**	**1,8**	**243**	**13,5**	**12,6**
Standard	**244**	**137**	**16 : 9**	**30**	**5**	**254**	**172**	**259**	**3,4**	**1,8**	**274**	**13,5**	**12,6**
Standard	**274**	**154**	**16 : 9**	**30**	**5**	**284**	**189**	**289**	**3,4**	**1,8**	**304**	**13,5**	**12,6**

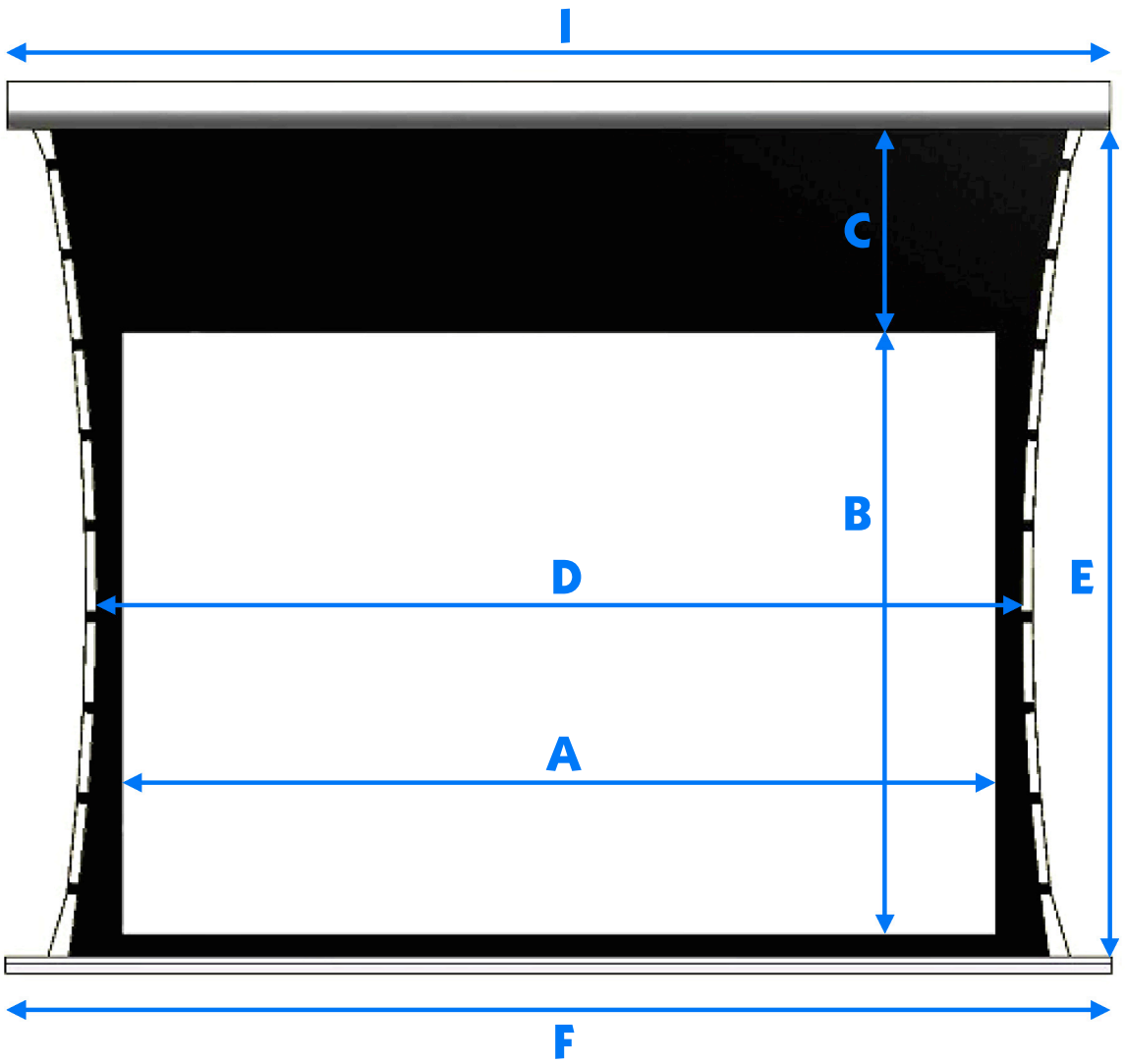

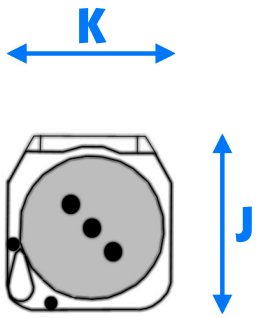

Height and width of the bottom bar

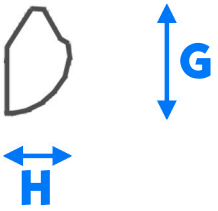

DA*VISION* 4D Tension restraint systems

Wall bracket

all declarations in mm

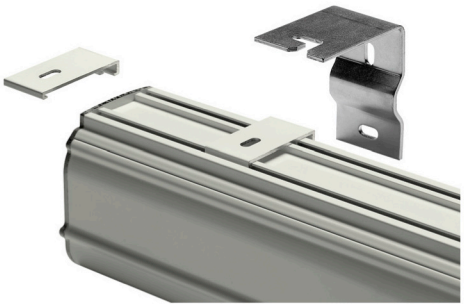

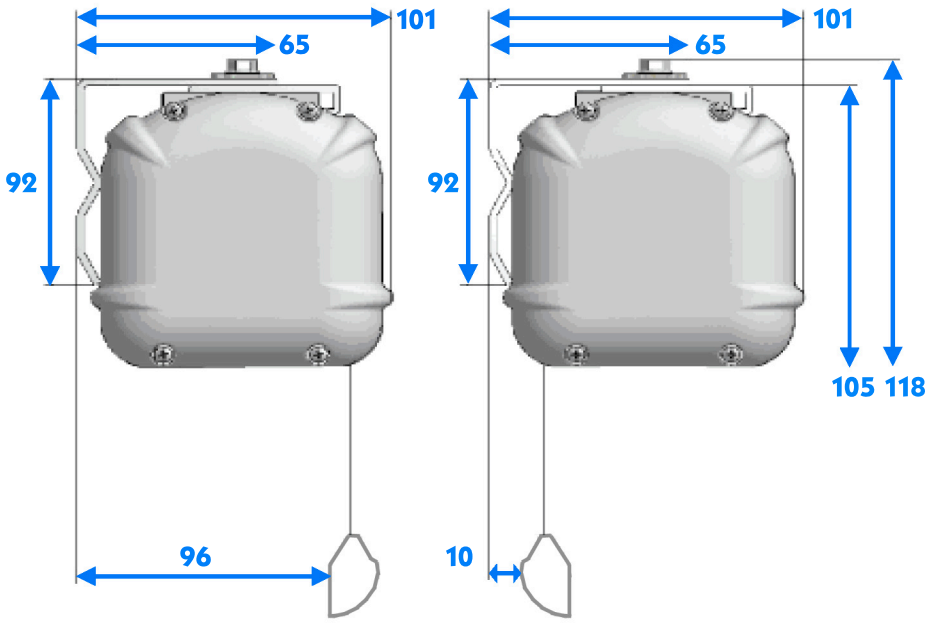

Ceiling bracket

all declarations in mm

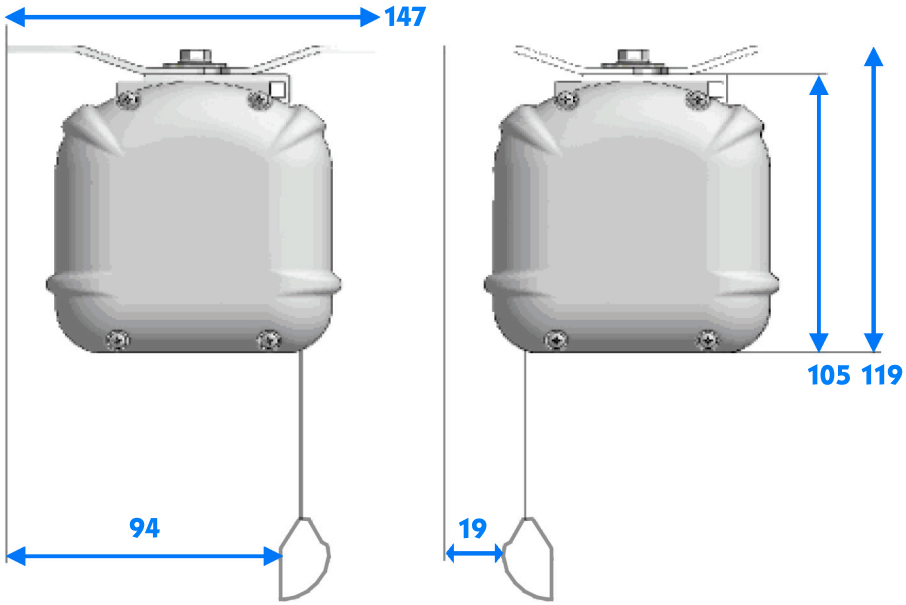

Quick-action bracket

all declarations in mm

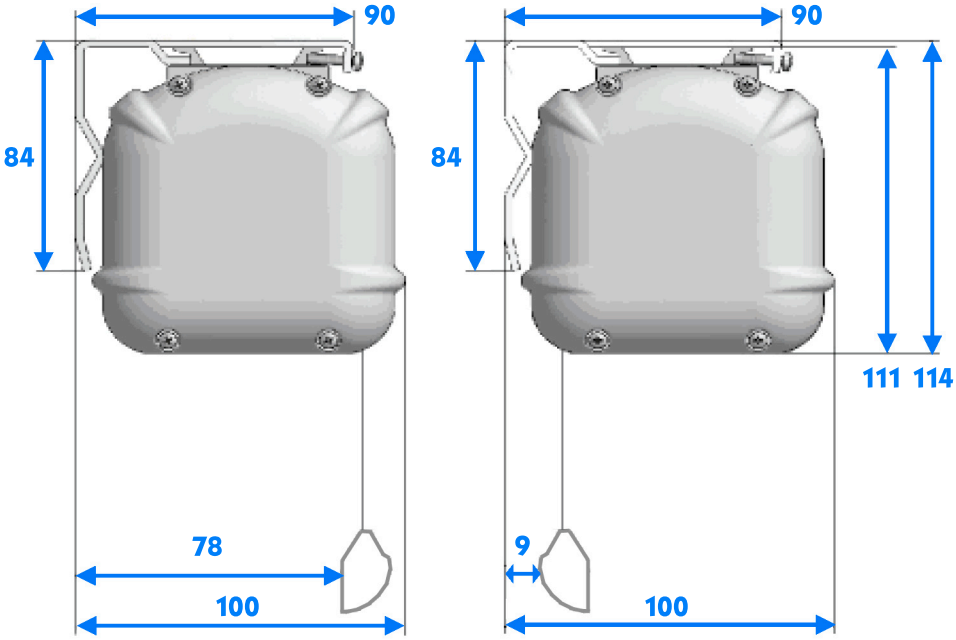

DAVISION
Made In Germany